# AP-1055D
## Asphalt Paver


| | |
|---|---|
| **Cat® C7 Engine with ACERT® Technology** | |
| Gross Power (SAE J1995) | 167 kW (224 hp) |
| **Standard Paving Width** | 3.05 m (10') |
| **Hopper Capacity** | 6.1 $m^3$ (13.2 tonne)<br>215 $ft^3$ (14.5 ton) |

| | |
|---|---|
| **Tractor Weight** | |
| AP-1055D with Mobil-trac™ | 17 601 kg (37,580 lb) |
| AP-1055D with Steel Track | 16 601 kg (36,600 lb) |

## Productivity and Reliability in a Durable Package

*The AP-1055D Asphalt Paver with ACERT® Technology offers fuel efficiency, high performance, speed and job versatility to maximize productivity.*

✔ **C7 Engine with ACERT®Technology**
ACERT® Technology works at the point of combustion to optimize engine performance. ACERT® Technology incorporates an electronic controller to precisely deliver multiple injections of fuel. These multiple injections are combined with a refined air management system in order to generate fewer emissions and optimize fuel combustion while meeting U.S. EPA Tier 3 and E.U. Stage IIIa engine emission regulations. The C7 engine is a turbocharged, 6-cylinder diesel engine that provides 167 kW (224 hp) of gross power (SAE J1995) at 2200 rpm with a maximum torque of 872 N-m (643 ft/lb).

**Page 4**

✔ **Dual Operator Stations**
The AP-1055D incorporates dual operator stations that can be rotated to four different positions. The stations have fully equipped consoles with meter per minute (feet per minute) gauges, adjustable suspension seats, armrests and retractable seat belts. The operator stations can be positioned beyond the machine frame. Extending beyond the frame provides the operator with good visibility when paving wider than 3.05 m (10 ft). This is important when matching a joint or when working along existing structures where precise paving control is required.

**Page 5**

✔ **Undercarriage Selection**
The AP-1055D can be purchased with either the Mobil-trac™ undercarriage or the steel track undercarriage. The Mobil-trac™ system combines the traction and flotation benefits of a crawler undercarriage with the mobility, speed, and ride characteristics of a wheel paver. The steel track undercarriage incorporates track rollers and a rear bogey system in order to provide a smooth ride.

**Page 6, 7**

✔ **High Capacity Cooling System**
The high capacity cooling system performs efficiently in high ambient temperatures. The variable speed fan draws air across the engine compartment and exhausts it away from the operator and engine compartment in order to provide a cooler working environment for the tractor and screed operators.

**Page 5**

✔ *New feature*


## Performance and reliability you can depend on.

*Based upon the industry-proven reputation of the Caterpillar® AP-1050B and AP-1055B Asphalt Pavers, the AP-1055D establishes new standards for productivity and reliability in the asphalt paver industry.*

*Durable, field proven powertrain, propel system and material handling system along with the world's largest and most dedicated dealer support system ensure the AP-1055D will provide maximum return on investment.*

**Hydrostatic Drive System**
The hydrostatic drive system eliminates chains and other mechanical linkages between the diesel engine and final drive components. A closed-loop hydrostatic propel system incorporates pave, travel and maneuver modes for maximum efficiency and versatility. The speed control system maintains preset paving speeds throughout the job. The machine controller provides accurate control of the steering and propulsion systems, and ensures straight-line tracking.

**Page 7**

**Gateless Feeder System**
The AP-1055D provides precise mix delivery through the most advanced material handling system. This exclusive feature reduces component wear and minimizes the potential for mix segregation.

**Page 8, 9**


**Generator (Optional)**
The generator is integrated within the machine frame and is located below the operator platform, between the dual operator stations. This integrated generator provides power to the electrically heated screed and the auxiliary power panel. A single control switch located on the tractor's center control console activates the generator.

**Page 10**

**Auxiliary Power Panel (Optional)**
The optional auxiliary power panel is available for simultaneous use with the electric screed. The auxiliary power panel supplies power to four, 120-volt and two, 240-volt receptacles. The 120-volt receptacles are protected with ground fault circuit interruption (GFCI).

**Page 10**

**Serviceability**
Simplified service means more paving time and less maintenance time. Large swing-open doors and panels provide convenient access to service areas. Transverse engine mounting provides ground-level access to hydraulic pumps and the engine cooling system. Color-coded and numbered wiring simplifies troubleshooting of the electrical systems. The standard 500-hour engine oil change interval increases machine up-time.

**Page 12**

# Cat® C7 Engine with ACERT® Technology

*ACERT® Technology incorporates a series of innovations working at the point of combustion to optimize engine performance while meeting U. S. EPA Tier 3 and E. U. Stage IIIa engine emission regulations.*


**Turbocharged and Air-To-Air Aftercooling (ATAAC)**
The turbocharged air-to-air aftercooling system provides high horsepower with increased response time while keeping exhaust temperatures low for long hours of continuous operation.
Air-to-air aftercooling keeps air intake temperatures down, maximizing fuel efficiency and minimizing emissions.

**Cat® C7 Engine with ACERT® Technology**
The C7 engine provides a full-rated gross power (SAE J1995) of 167 kW (224 hp) at 2200 rpm with a torque of 872 N-m (643 ft/lb). The combination of large displacement and high torque allow the AP-1055D to perform under the toughest conditions.

**HEUI Fuel Injection**
The HEUI™ fuel system is unique and combines the technical advancement of an electronic control system with the simplicity of HEUI fuel injection. The HEUI fuel system excels in its ability to control injection pressure over the entire engine operating speed range. These features allow the C7 engine to have complete control over injection timing, duration and pressure.

**Multiple Injection Fuel Delivery**
Multiple injection fuel delivery involves a high degree of precision. Precisely shaping the combustion cycle lowers combustion chamber temperatures, which generates fewer emissions, optimizes fuel combustion and translates into more work output for your fuel cost.

**High Cylinder Pressures**
High cylinder pressures combined with tightly controlled tolerances promote extremely efficient fuel burn, less blow-by and lower emissions.

**C7 Cylinder Block**
The C7 engine's cylinder block offers increased tensile strength. It features improved sealing with gaskets to ensure fewer leaks. This new design supports the engine's higher compression ratios and increases its power density. The incorporation of straight-thread "O" ring connection points reduce the loss of engine oil and fluids.

**Sound Reduction Features**
The C7 engine sound reduction features include composite valve covers with a fully isolated base, a steel oil pan and a cast iron front cover. The HEUI™ fuel systems rate-shaping technology also provides control of sound and vibration levels.

**Service, Maintenance and Repair**
Easier service, maintenance and repair is accomplished by monitoring key functions and logging critical indicators. Advanced electronic diagnostic capabilities are possible using CAT® Electronic Technician.

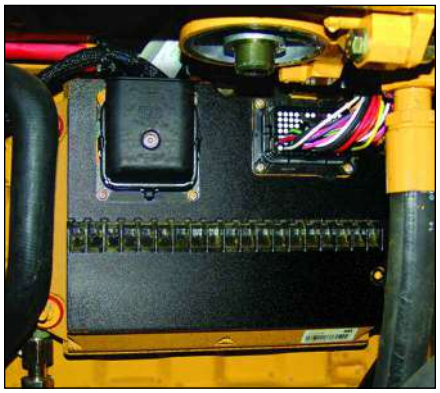

**ADEM™ A4 Electronic Control Module**
The ADEM A4 electronic control module manages fuel delivery, valve timing and airflow to get the most performance per liter (gallon) of fuel used. The control module provides flexible fuel mapping, allowing the engine to respond quickly to varying application needs. The control module also monitors engine and machine conditions while keeping the engine at peak efficiency.

## High Ambient Temperature Cooling System

*The standard, high-capacity cooling system provides efficient operation in high ambient temperatures. The new system design also provides quiet operation that benefits the operator and the surrounding environment.*

**Airflow**
The airflow design draws ambient air across the engine compartment and through the radiator. This new design allows the exhaust air to exit the right side of the machine in order to provide a cooler engine compartment and operator platform.

**High Capacity Cooling Package**
The high capacity cooling system allows the fan to run slower, reducing power demand while extending component life.

**Variable Speed Fan**
The variable speed fan is electronically controlled and hydraulically driven to provide on-demand cooling. This on-demand operation reduces engine power demand and provides quiet operation.

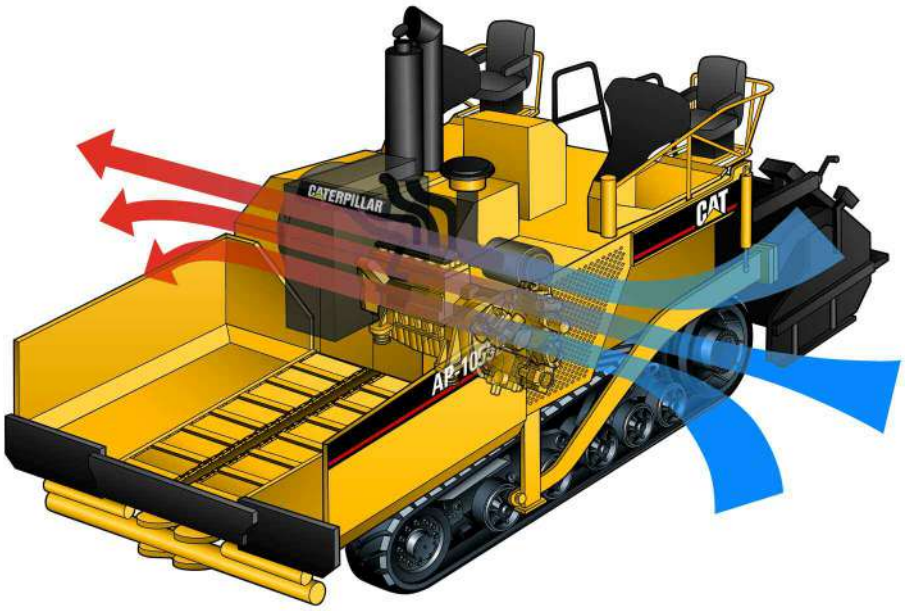


## Dual Operator Stations

*The dual operator stations provide complete control and good visibility from either side of the operating platform.*

**Dual Operator Stations**
The dual operator stations incorporate fully equipped consoles with meter per minute (feet per minute) gauges, adjustable suspension seats, armrests and retractable seat belts.

**Operator Visibility**
The dual operator stations can be positioned in one of four different locations to provide optimum visibility. The stations can extend beyond the machine frame for good visibility when joint matching or while paving other applications where precise control is required.

**Center Control Console**
The center control console includes analog gauges, switches and a digital display for machine functions. The center console also houses a majority of the electrical components for fast, easy service.

# Mobil-trac™ Undercarriage

*The Mobil-trac undercarriage provides superior durability while delivering unmatched mobility and traction.*

**Mobil-trac™ Undercarriage**
The Mobil-trac undercarriage combines the flotation and traction benefits of a crawler suspension with the mobility and ride quality of a wheel-type paver.

**Durable Mobil-trac™ Belt**
The Mobil-trac system includes a durable, high strength rubber track belt with a thick outer cover and five internal layers of flexible steel cable.

**Large Ground Contact Area**
The Mobil-trac's ground contact area is 3020 mm (119") long and 457 mm (18") wide. This large footprint provides even weight distribution over the entire length of the belt.

**Two Speed Planetary Drive**
A fixed displacement motor drives a two-speed planetary providing quick mobility around the job site.

**Friction Drive**
A hydraulic tensioning cylinder with an accumulator maintains friction between the Mobil-trac belt and the drive wheel in order to provide drive traction. Manual adjustment of track tension is not required.

**Rubber Coated Steel Mid-Wheels**
The fully bogied undercarriage provides low maintenance and long life.


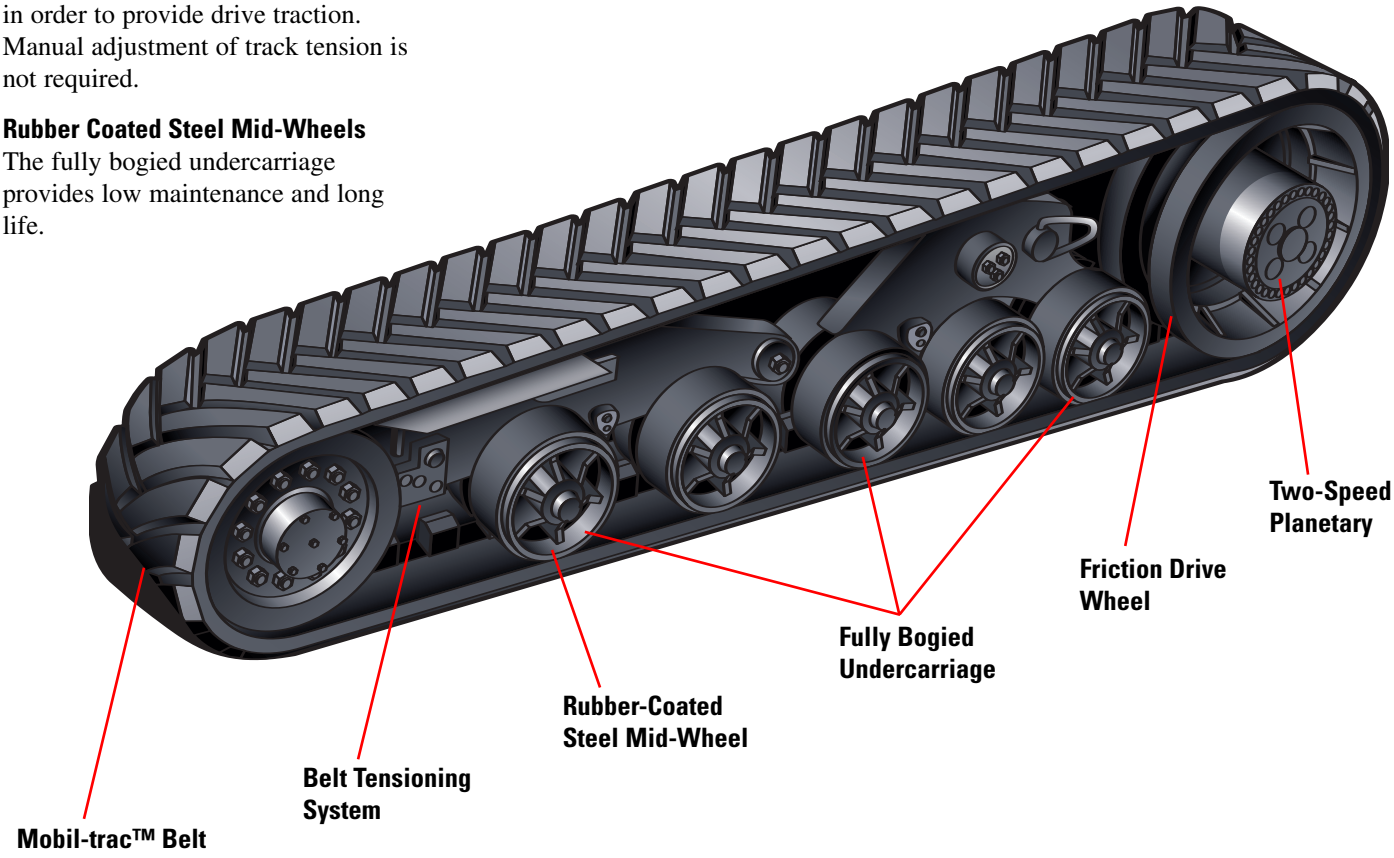

## Steel Track Undercarriage

*The steel track undercarriage provides even weight distribution, good tractive effort and dependable performance.*

**Quad Rear Bogey**
A special quad bogey is positioned near the rear of the steel track in order to evenly distribute the load. The steel track system includes hydraulic cylinders to provide automatic tensioning.

**Track Rails**
The steel track system incorporates D3 dozer track rails. The sealed and lubricated links include a split master link for dependable performance.

**Bonded Track Pads**
The track pads contain a special rubber compound in order to provide long life and good traction. The pads are attached with two bolts for easy replacement.

**Single Speed Planetary Drive**
A variable displacement motor drives a single-speed planetary in order to provide infinitely variable speed selection.

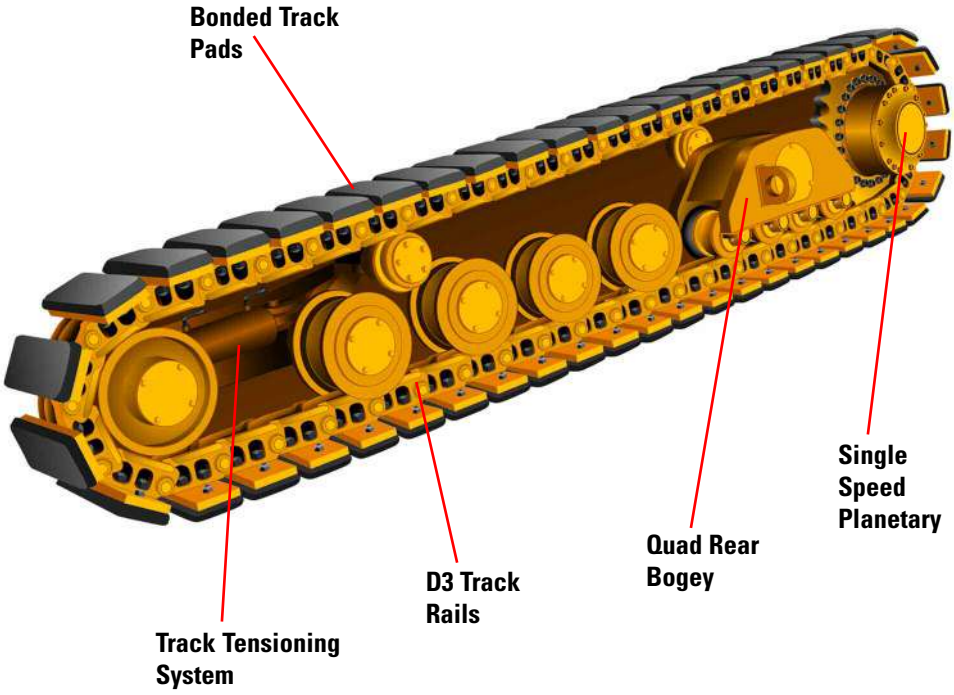


## Hydrostatic Drive System

*Efficient hydrostatic drive system eliminates chains and other mechanical linkages between the engine and final drive components.*

**Closed-Loop Hydrostatic Propel System**
The propel system incorporates pave, travel and maneuver modes for maximum versatility.

**Propulsion Control**
The machine controller provides accurate control of steering and propulsion systems and ensures straight-line tracking.

**Speed Control**
A speed control dial located on each operator station allows the operator to set a maximum travel speed. When the propel lever is positioned in the full-forward position the paver will travel at the pre-set speed. Each station includes a meters per minute (feet per minute) gauge.

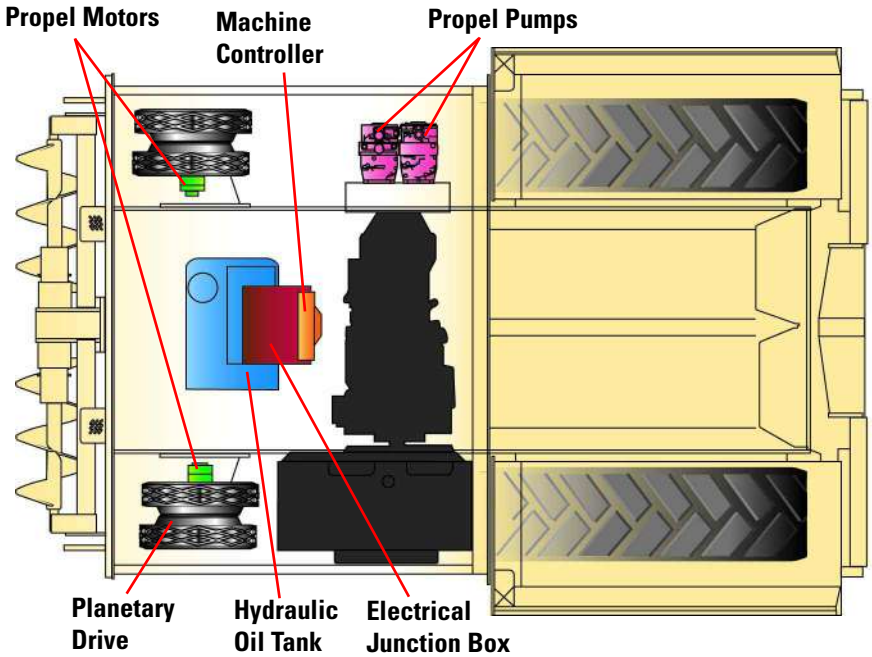

## Exclusive Material Delivery System

*Productivity and quality enhancements are built-in features.*

The AP-1055D provides precise mix delivery with minimal operator monitoring through the most advanced material handling system.

Left and right feeders in addition to the left and right augers are controlled independently. The ability to control these four components separately, through a machine controller, eliminates the need for feeder gates.

In order to control mix delivery, the operator sets a speed rate for each feeder that will maintain the desired mix level in the left and right auger chambers.

Once the feeder speeds are set, the ratio of feeder speed to the maximum auger speed is automatically maintained by the machine controller, even though the propel rate may change as the job progresses.

This ratio control capability is particularly helpful when paving wider on one side of the machine than on the other. Each feeder can be set at a specified speed to deliver the proper amount of mix that is needed.

## Outboard Feeder Drives

*Increased live tunnel area provides easy servicing.*

The feeders have outboard mounted motors, reducers and feeder drive chains to maximize the live feeder tunnel area and reduce center line segregation. This design also provides greater ease of servicing the feeder drive system.

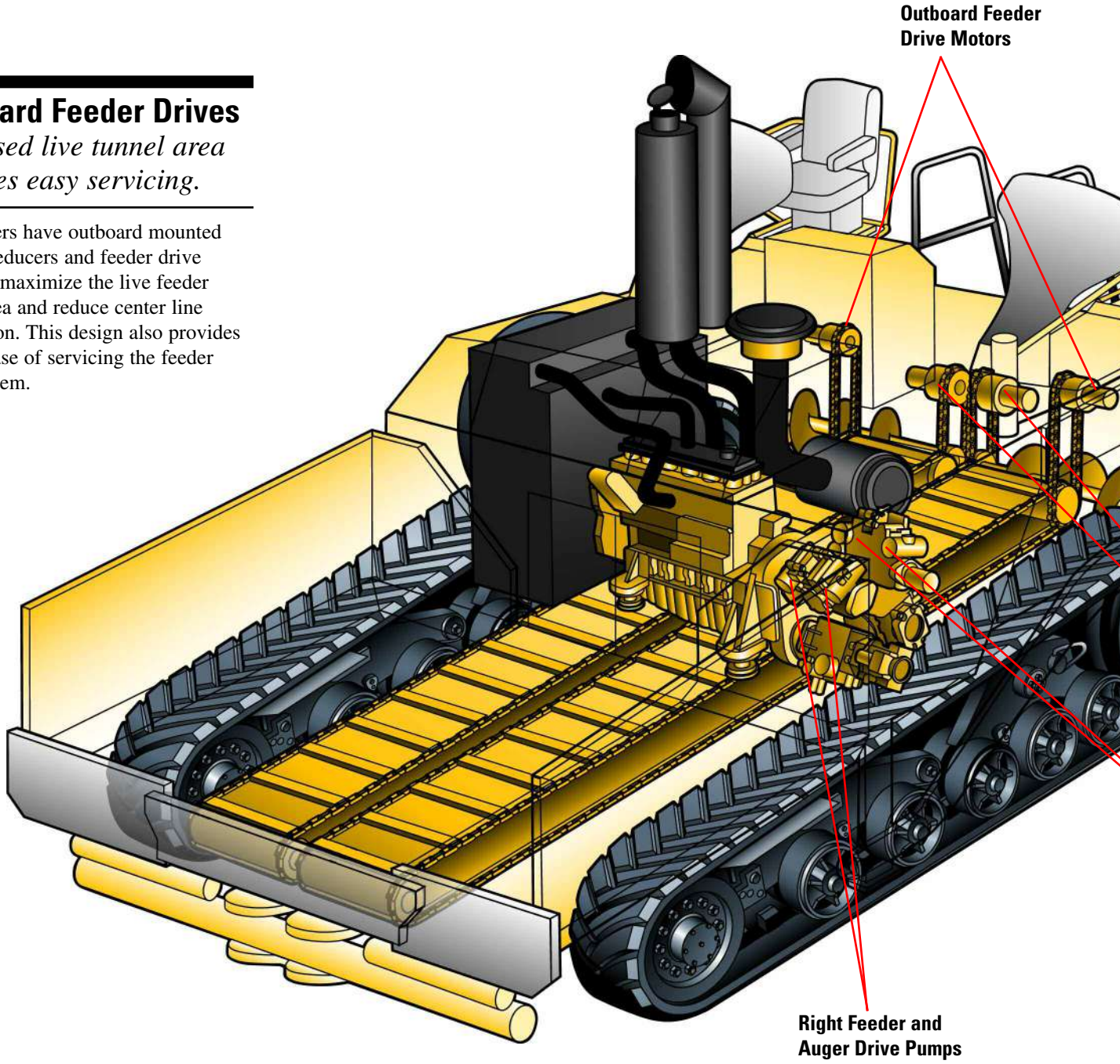

## Gateless Feeders

*Variable speed feeders precisely control mix delivery while reducing wear and segregation.*

The gateless feeders on the AP-1055D always run full of mix regardless of the speed required to fill the auger chamber. This is typically a slower speed than would be experienced with a paver utilizing feeder gates to control mix delivery rates. By not always having to run at full speed, feeder component wear is significantly reduced.

When changes in feeder speed are required, delivery of mix to the augers is immediate. This is in contrast to pavers with gates, where any delivery rate change is delayed for the length of time it takes to clear the tunnel of mix from the previous gate setting.

Running at slower speeds can also help reduce the opportunity for segregation, especially when working with larger stone mixes that have more of a tendency to segregate.

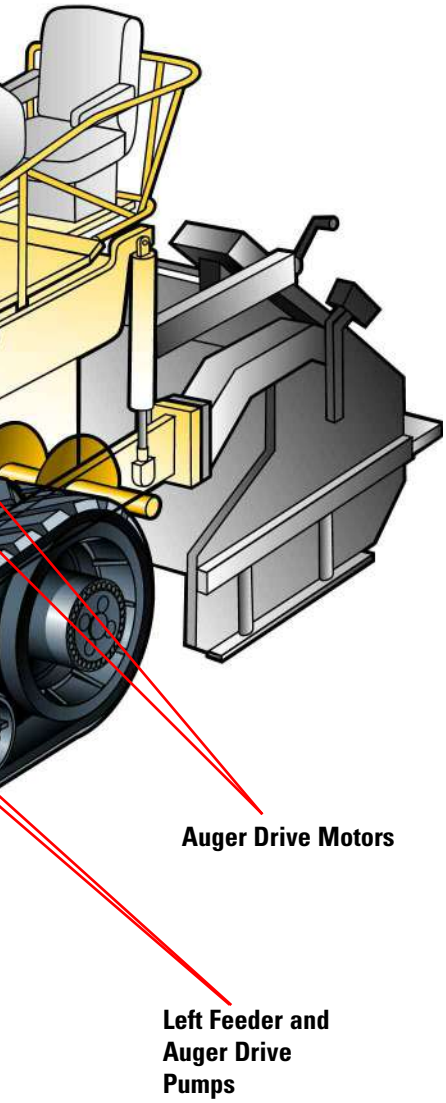


## Feeder Design

*Tunnel construction improves mix flow.*

The AP-1055D auger drive assembly is independent of the tractor which allows the distance between the two feeders to be significantly reduced. Keeping the feeders close together allows the flow from both feeders to blend together more easily as they discharge into the auger cavity. The tunnel and auger designs eliminate voids under the chain case to minimize segregation.

## Auger Assembly

*Provides mat consistency while minimizing segregation.*

The auger assembly height can be hydraulically adjusted 192 mm (7.6"). The ability to raise the auger assembly simplifies loading and unloading from a transport vehicle. Also, when working with larger stone mixes, segregation can often be eliminated or minimized by raising the augers to allow mix to flow unrestricted under the auger assembly.

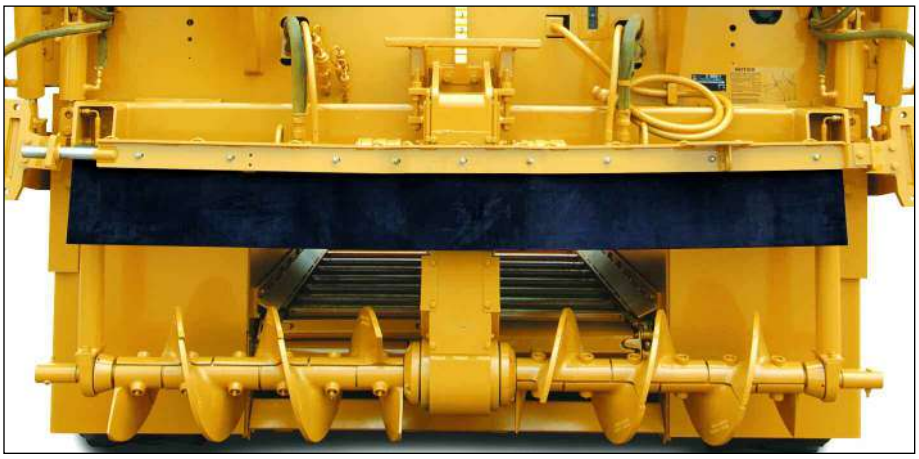

## Optional Generator System

*The high capacity, integrated generator ensures peak performance and high reliability.*

**Industrial, Single-Phase Generator**
The 24 kW generator is hydraulically driven through a load-sensing, pressure-compensating pump providing quiet operation.

**Single Control Switch**
A single switch on the tractor's operating console activates the generator. The generator operates at 1800 rpm and includes GFCI protection.

**Full Power**
Full power is provided to the electric screed and auxiliary power panel while the engine is operating at low idle speed. A control manifold and internal voltage regulator maintains constant frequency and voltage at both high and low idle.

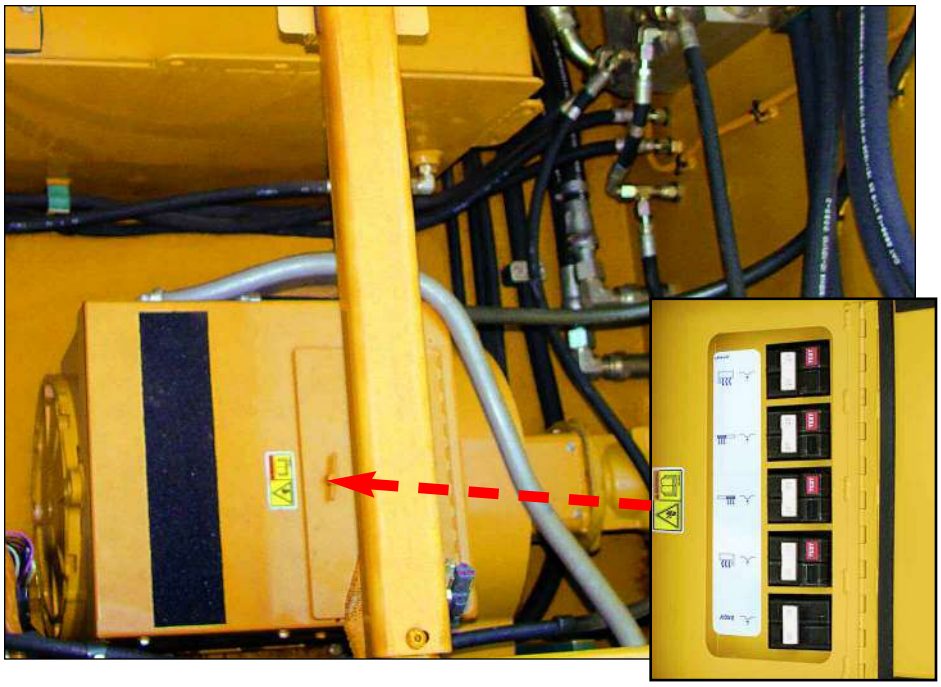

## Optional Auxiliary Power Panel

*The auxiliary power panel provides efficient power for night-time lighting and other job site power needs.*

**Optional Auxiliary Power Panel**
The power panel provides 8 kW of power and includes four 120-volt receptacles protected by ground fault circuit interruption (GFCI) and two 240-volt receptacles.

**Power Needs**
The auxiliary power panel can be used to supply power for night-time lighting and job site work tools.

**Auxiliary Power Panel Door**
The panel door can remain closed while power cords are attached to the receptacles providing effective protection.

# Electric Heat Screeds

*The AS-2301 and Extend-A-Mat® 10-20B screeds are available with an electric heating system.*

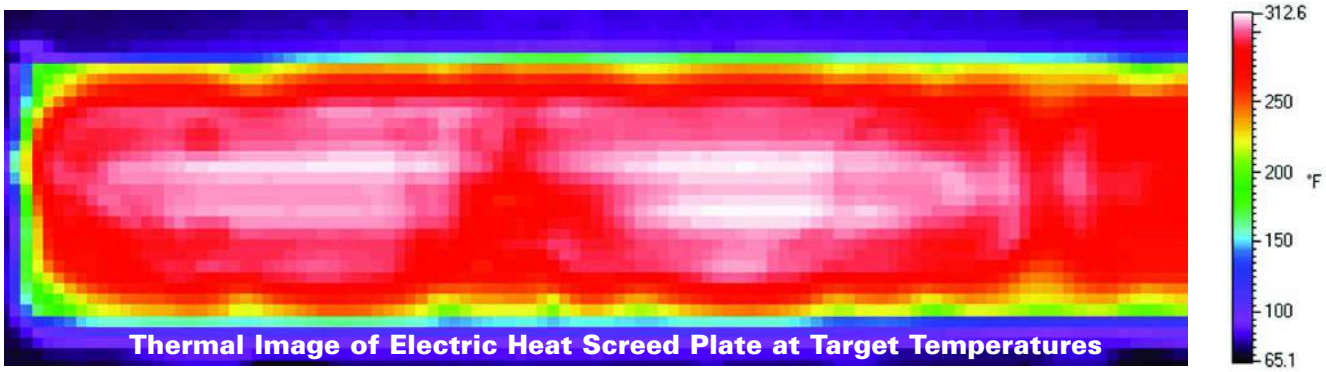


Thermal Image of Electric Heat Screed Plate at Target Temperatures

**Operator Friendly Environment**
The electric screed plate heating system eliminates the use of diesel fuel burners, creating a user friendly environment.

**Fast Warm-Up Time**
The electric screed provides a warm-up time in 30 minutes or less to 122° C (220° F) when ambient temperatures are at or above 22° C (40° F).

**Simple Operation**
The screed control panel incorporates touch-pad technology with high intensity LED's that promote simplified use and diagnostic capability with minimal operator training.

**Multi-Zone Heating Elements**
The heating elements are mounted to the screed plates in a multi-zone configuration to provide even heat distribution.

**Thermostatically Controlled**
The screed plates incorporate thermostatically controlled temperature sensors in each screed section including the extenders. The temperature sensors provide inputs to the screed controller.

** Refer to the Screed Specalogs for more detailed information.*

## Serviceability

*Simplified service means more paving and less maintenance time.*

**Electronic Monitoring System (EMS-III)**
EMS-III simplifies calibration of hydraulic and electrical systems and is compatible with CAT® Electronic Technician (CAT ET).

**Large Access Doors and Panels**
Preventative maintenance points can be accessed through the large swing open access doors and panels.

**Remote Lubrication Points**
Grease fittings are grouped to provide quick, routine service of bearings.

**Quick-Connect Sampling Ports**
The quick-connect ports simplify retrieval of critical fluids for diagnosis.

**Color-Coded and Numbered Electrical System**
Troubleshooting is efficient and simplified with the color-coded and numbered electrical system.


## Optional Equipment

**Tractor Options**
- Auger and Mainframe Extensions
- Oscillating Push Rollers
- Truck Hitch
- Generator
- Auxiliary Power Panel
- Ventilation System
- Decelerator Pedals
- Sonic Feeder Sensor or Proportional Paddle Sensor
- Steering Guide
- Warning Beacon
- Umbrella
- Uptime Kit
- Washdown System

**Controls and Grade References**
- Automatic Grade and Slope Control
- Non-Contacting Sonic Grade Sensor
- Contacting Grade Sensor
- Outboard Leveler, 9.15 m (30') and 12.2 m (40')
- Inboard Leveler
- Mobile Stringline
- Fore 'N Aft Leveler
- Sonic Averaging Beam
- Rigid Ski, 9.15 m (30') and 12.2 m (40')

**Screed Choices**
- Extend-A-Mat® 10-20B (electric or diesel)
- Extend-A-Mat® 10-20WB (diesel only)
- AS-2301 (electric or diesel)
- Pavemaster 10B (diesel only)

* Reference Screed Specalogs for detailed information.

## Engine

The Caterpillar® C7 engine with ACERT® Technology is a six cylinder, turbocharged, diesel engine. The engine meets U.S. EPA Tier 3 and EU Stage IIIa engine emission regulations.

| Engine | Cat® C7 | |
|---|---|---|
| **Gross Power** | **kW** | **hp** |
| SAE J1995 | 167 | 224 |
| **Net Power** | **kW** | **hp** |
| ISO 9249 | 166 | 223 |
| EEC 80/1269 | 166 | 223 |
| SAE J1349 | 165 | 221 |
| **Specifications** | | |
| Bore | 110 mm | 4.33" |
| Stroke | 127 mm | 5.0" |
| Displacement | 7.24 L | 441.7 $in^3$ |

- The power ratings apply at a rated speed of 2200 RPM when tested under the reference conditions for the specific standard.
- The net power advertised is the power available at the flywheel when the engine is equipped with alternator, air cleaner, muffler and fan at minimum speed.
- The net power at the flywheel when the fan is at maximum speed is 151 kW (202 hp) per the SAE J1349 reference conditions.
- Derating is not required up to an altitude of 2134 m (7,000 ft).

## Electrical System

The 24-volt electrical system utilizes two 12-volt batteries and a 24-volt, 100-amp alternator. The wiring is color-coded and number impregnated for easy servicing. Electrical wiring is protected by vinyl-coated nylon braiding for greater durability. Circuit breakers located on the front side of the center console include manual resets.

## Suspension

The high-speed Mobil-trac™ undercarriage consists of a durable, high-strength rubber belt with a thick outer cover that includes five internal layers of flexible steel cable. The track is 3023 mm (119") long and 457 mm (18") wide. Drive traction is provided by a hydraulic tensioning cylinder with accumulator that maintains friction between the belt and the drive wheels. Rubber-coated steel mid-wheels provide smooth ride and high traction efficiency by distributing weight over the entire length of the belt.

The steel track undercarriage consists of four 241 mm (9.5") diameter track rollers, a special rear, four roller 152 mm (6") diameter bogey, and two 152 mm (6") diameter single roller return idlers per side. Rollers are bogied in pairs and each pair is articulated for optimum leveling capability. Rollers ride on Caterpillar® D3 track rails. Track rails are sealed, lubricated and include a split master link for quick track removal and installation. The 3048 mm (120") tracks are fitted with 127 mm (5") by 356 mm (14") rubber bonded track pads. Track tensioning is provided by a parallel link swing arm design that provides constant hydraulic pressure. Track tension is maintained without manual adjustment. Recoil forces are controlled by check and relief valves.

## Drive System

The Mobil-trac™ drive system utilizes two dual path hydrostatic pumps and two fixed displacement motors. The pumps are infinitely variable with electronic displacement controls (EDC) for steering and speed. Single speed motors drive two speed planetary gear boxes to provide two propel ranges. The drive system is equipped with two switches located at the operator stations. The two switches are used as manual overrides and are directly linked to EDC's.

The steel track drive system utilizes two dual path hydrostatic pumps and two variable displacement motors. The pumps are infinitely variable with electronic displacement controls (EDC) for steering and speed. The two speed motors drive single speed planetary gear boxes to provide two propel ranges. The drive system is equipped with two switches located at the operator stations. The two switches are used as manual overrides and are directly linked to EDC's.

| Forward Speed Ranges | | |
|---|---|---|
| **Paving** | | |
| Mobil-trac | 0-67 mpm | 0-220 fpm |
| Steel Track | 0-78 mpm | 0-255 fpm |
| **Travel** | | |
| Mobil-trac | 0-15 km/hr | 0-9 mph |
| Steel Track | 0-8 km/hr | 0-5 mph |

## Feeders and Augers

Dual feeders and augers are controlled through variable speed hydrostatic drives and operate independently of forward speed. Right and left side feeders operate independently of each other. Feeder drive and drive chains are located outside the mainframe for easy accessibility.

Feeder flights are constructed of heavy-duty bushed roller chain with forged steel flight bars sliding over replaceable, abrasion-resistant drag pans with 360-440 Brinell hardness.

Long life auger system consists of segmented, 406 mm (16") diameter, cast Ni-Hard steel hemi-screw augers. Auger and hanger bearings have built-in steel shields for greater protection. Augers are driven independently by two motors. Each auger is controlled by an adjustable material flow switch. Manual override is provided. Auger height is hydraulically adjustable 192 mm (7.6").

## Ventilation System

The ventilation system helps remove asphalt gas, vapors and fumes from the auger chamber area. The system consists of a hydraulically driven exhaust fan, ducts and exhaust stack to vent asphalt gas, vapors and fumes away from the operator and screed areas. The design provides good visibility to the feeders and a cooler operating environment.

## Operator Stations

The operator stations include dual control consoles, each with lockable vandal cover, steering wheel, meter per minute (feet per minute) gauge, auger raise/lower switch, hopper raise/lower switch, left and right feeder auto/off/man switch, left and right feeder speed control dial, left and right auger auto/off/man switch, manual auger reverse switch, screed vibrator switch, engine start switch, propel forward/reverse control lever, pave/travel/maneuver speed range selection switch, horn, maximum speed control dial, secondary brake switch, screed lift switch up/down, extender in/out switches and engine speed switch.

The center control console includes the power key switch, left and right console selection switch, warning beacon switch, working light switch, generator switch, screed counterbalance switch and the horn button. Analog gauges are provided for engine coolant temperature, engine oil pressure, hydraulic oil temperature and fuel level. An electronic monitoring system (EMS-III) with horn and light indicators monitor the left track pressure, right track pressure, system voltage, engine temperature, operator error, hydraulic oil level, propel system, charge filter, material feed and screed plate heat. A digital display provides engine rpm, service code information, hour meter, gear selection and meter per minute (feet per minute).

## Service Refill Capacities

| | Liters | Gallons |
|---|---|---|
| Engine Oil w/filter | 26 | 6.8 |
| Fuel Tanks (Dual) | 462 | 122 |
| Hydraulic Oil Tank | 149 | 39.4 |
| Cooling System | 36 | 9.5 |

## Steering

Hydraulic power assist steering system provides smooth, low effort steering by means of a steering wheel. Electric over hydraulic dual path differential steering assures precise machine control. Steering commands are independent of propel speed.

Three steering modes including pave, travel and maneuver are selectable at the operator consoles. When in the pave or travel mode, the steering range is electrically reduced to minimize abrupt steering movements. When in maneuver mode, the steering system is at full range, allowing the paver to pivot-turn by counter-rotating the tracks.

**Inside Turning Radius:**
914 mm (3')

## Brakes

The service braking system consists of a closed-loop, hydrostatic system that provides dynamic braking.

The secondary braking system includes a spring applied, hydraulically released brake which is actuated by a switch on each operator console.

## Dimensions

| | | |
|---|---|---|
| **A** | Tractor length w/push roller | 4.77 m (15' 8") |
| **B** | Length with push roller and screed | 6.54 m (21' 6") |
| | Length with truck hitch and screed | 7.03 m (23' 1") |
| **C** | Transport width with end gates and 10-20B screed (hopper raised) | 3.33 m (10' 11") |
| | Transport width with end gates and AS-2301 screed (hopper raised) | 3.38 m (11' 1") |
| | Transport width without end gates and 10-20B screed(hopper raised) | 3.05 m (10') |
| | Transport width without end gates and AS-2301 (hopper raised) | 3.23 m (10' 7") |
| **D** | Tractor operating width (hopper lowered) | 3.31 m (10' 10") |
| **E** | Operating height with ventilation system | 3.55 m (11' 8") |
| **F** | Transport height with muffler, fumes stack and seat lowered | 2.82 m (9' 3") |
| **G** | Truck dump height | 658 mm (26") |
| **H** | Push roller height | 533 mm (21") |
| **I** | Hopper length | 2.00 m (6' 7") |
| **J** | Truck entry width | 3.22 m (10' 7") |

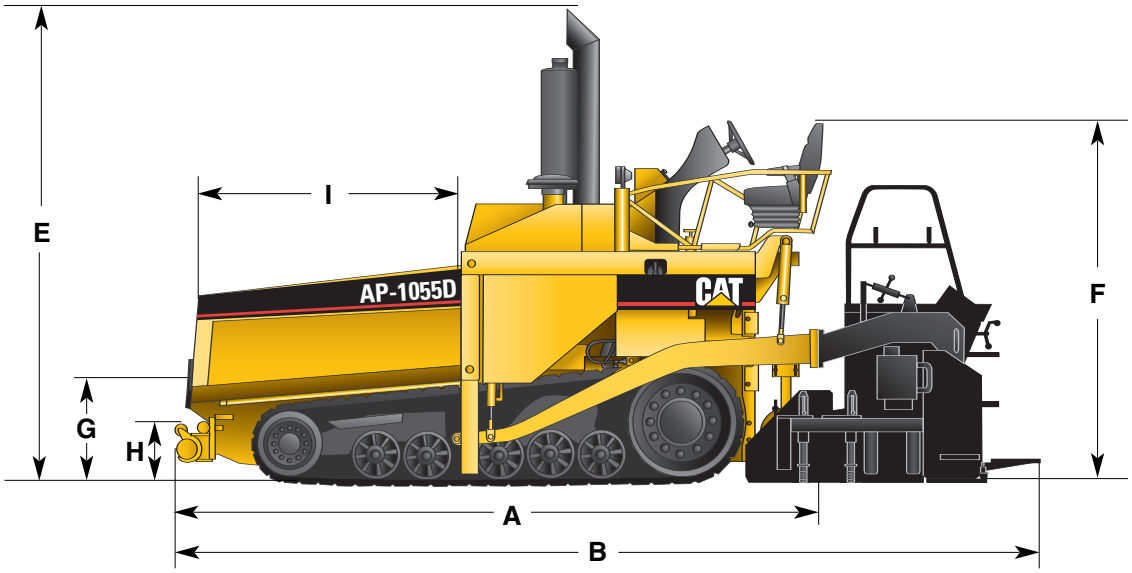


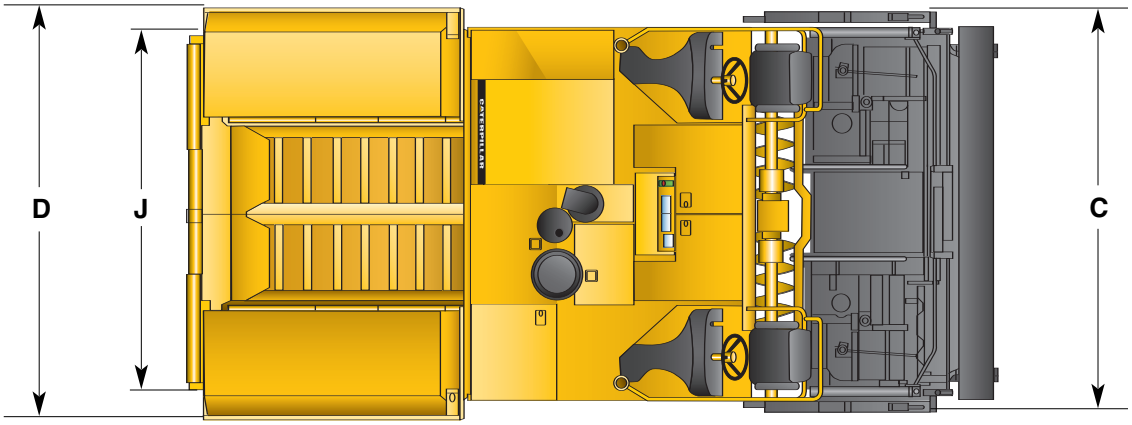


## Weights (approximate)

| | AP-1055D Mobil-trac | AP-1055D Steel Track |
|---|---|---|
| Tractor: (includes generator) | 17 061 kg (37,580 lb) | 16 601 (36,600) |
| with Extend-A-Mat®10-20B (diesel heat) | 20 477 kg (45,130 lb) | 20 044 (44,150) |
| with Extend-A-Mat 10-20B (electric heat, includes generator) | 20 330 kg (44,780 lb) | 19 867 (43,800) |
| with AS-2301 (diesel heat) | 20 621 kg (45,420 lb) | 20 175 (44,440) |
| with AS-2301 (electric heat, includes generator) | 20 602 kg (45,380 lb) | 20 139 (44,400) |

## Caterpillar offers a comprehensive line of Asphalt Pavers

*Contact your local Caterpillar® dealer to learn more about the complete line of Caterpillar® Paving Products.*


**The AP-1000D Wheel Asphalt Paver**

| | | |
|---|---|---|
| Gross power (SAE J1995) | 167 kW | 224 hp |
| Tractor weight* | 14 741 kg | 32,470 lb |
| Standard paving width | 3.05 m | 10' |

** Tractor weight includes generator and auxiliary power panel.*


**The AP-800D Wheel Asphalt Paver**

| | | |
|---|---|---|
| Gross power | 97 kW | 130 hp |
| Tractor weight* | 13 307 kg | 29, 310 lb |
| Standard paving width | 2.44 m | 8' |

** Tractor weight includes generator and auxiliary power panel.*


**The AP-655C Mobil-trac™ Asphalt Paver**

| | | |
|---|---|---|
| Gross power | 130 kW | 174 hp |
| Tractor weight* | 15 690 kg | 34,560 lb |
| Standard paving width | 2.44 m | 8' |

** Tractor weight includes generator and auxiliary power panel.*


**The AP-650B Steel Track Asphalt Paver**

| | | |
|---|---|---|
| Gross power | 97 kW | 130 hp |
| Tractor weight | 13 917 kg | 30,655 lb |
| Standard paving width | 2.44 m | 8' |



QEHQ1114 (2/05)

Featured machines in photography may include optional equipment.
Materials and specifications are subject to change without notice.

CATERPILLAR®